Montgomery Burns
Springfield
February 17, 2014

Math 104 Students
Wheaton College
Norton, MA 02766

Dear Calculus Students:

With parts of the economy beginning to rebound, the Springfield Nuclear Power Plant recorded a record profit last quarter, in no small part because so much of the regulatory attention was focussed elsewhere (thank you, Keystone XL!).

To celebrate our successes, I am remodeling a portion of the bi-level atrium at the company headquarters (eligible for a tax writeoff, of course) to include a large ornamental pool with transparent polycarbonate sides and bottom that will be visible from both above at the upper level of the atrium and below at the lower level. The centerpiece of pool will be 50 floating decorative vases whose design was picked from entries submitted by the families of the employees (saving on design fees while giving the workers a false sense of influence). Some child named Bert, or Bart or something similarly monosyllabic, won the contest, but that is irrelevant at this point. Now that I have the design of the vases, there are a few additional details to be worked out. When I went looking for help, your enterprising and resourceful professor naturally referred me to you.

The plans call for open-top vases that are 30 cm high and are constructed of a lightweight, cerulean blue carbon fiber that is one centimeter thick on the sides and bottom. The design requires that 15 cm of the vase is visible above water. In addition, there will be 5 thin stripes of 12-carat gold ribbon on each vase running along the outer surface straight down from the top rim to the flat bottom. The basic design is:

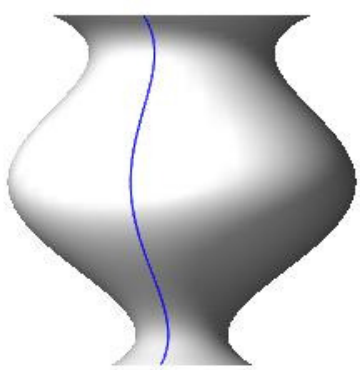

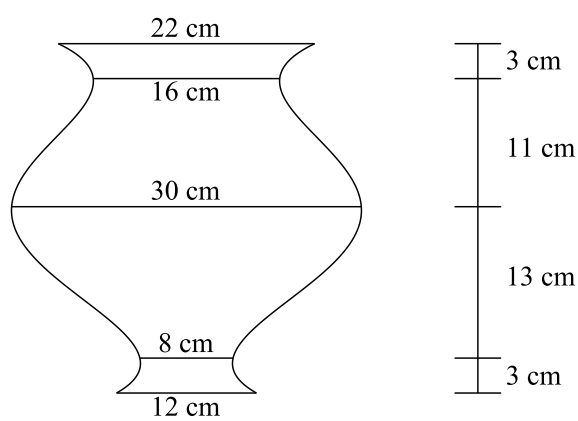

This is where I need your help. First I need to know that it is possible for the vases to float with exactly 15 cm visible above the water. If more than 15 cm is visible, then we will need to add weight into vases to make them sink to the appropriate level. The plans call for adding a special, loose-packed, fluorescent magenta decorative sand, and I need to know how much is required. I also need to know the length of gold ribbon used on each each vase. Finally, I would like a summary of the total amount of ribbon needed and the total amount of sand required for all 50 vases.

In addition, the artist (I use the term very loosely) has proposed adding some smaller vases that are identical in shape, but all measurements are scaled in half so that vases are only 15 cm high and 15 cm wide at the widest point. However, due to the carbon fiber manufacturing process, each vase will still be 1 cm thick. We still want half of each vase, or 7.5 cm to be visible above water. I would like your expert opinion on the viability of including these smaller vases.

After describing my needs to your enterprising and resourceful professor, he suggested that you might find it useful to know that the carbon fiber weighs approximately 1.75 grams per cubic centimeter, that the special decorative sand weighs approximately 1.2 grams per cubic centimeter.

I realize that this is a busy time of the semester for you, but in order to complete the project before our summer board meeting, I will need your report by the end of the day on Tuesday, March 4.

Capitalistically yours,
Montgomery Burns
Owner, Springfield Nuclear Power Plant

A Few Comments From Your Enterprising and Resourceful Professor

- The vase looks suspiciously like a surface of revolution, and you will probably want to find a function to model it. If you turn the vase on its side and use the five points you are given, a fourth degree polynomial $f(x) = ax^4 + bx^3 + cx^2 + dx + k$ might be a good place to start.
- To find the length of the 12-carat gold ribbon, you will need to look up the formula for calculating the arc length of a graph.
- It may also be useful to know that a floating object displaces an amount of water that is equal in weight to the weight of the object. For example, a floating object that weighs 10 kilograms will displace 10 kilograms of water. Finding the weight of the vase might be one way to proceed.
- You might find it interesting that one cubic centimeter of water weighs one gram.